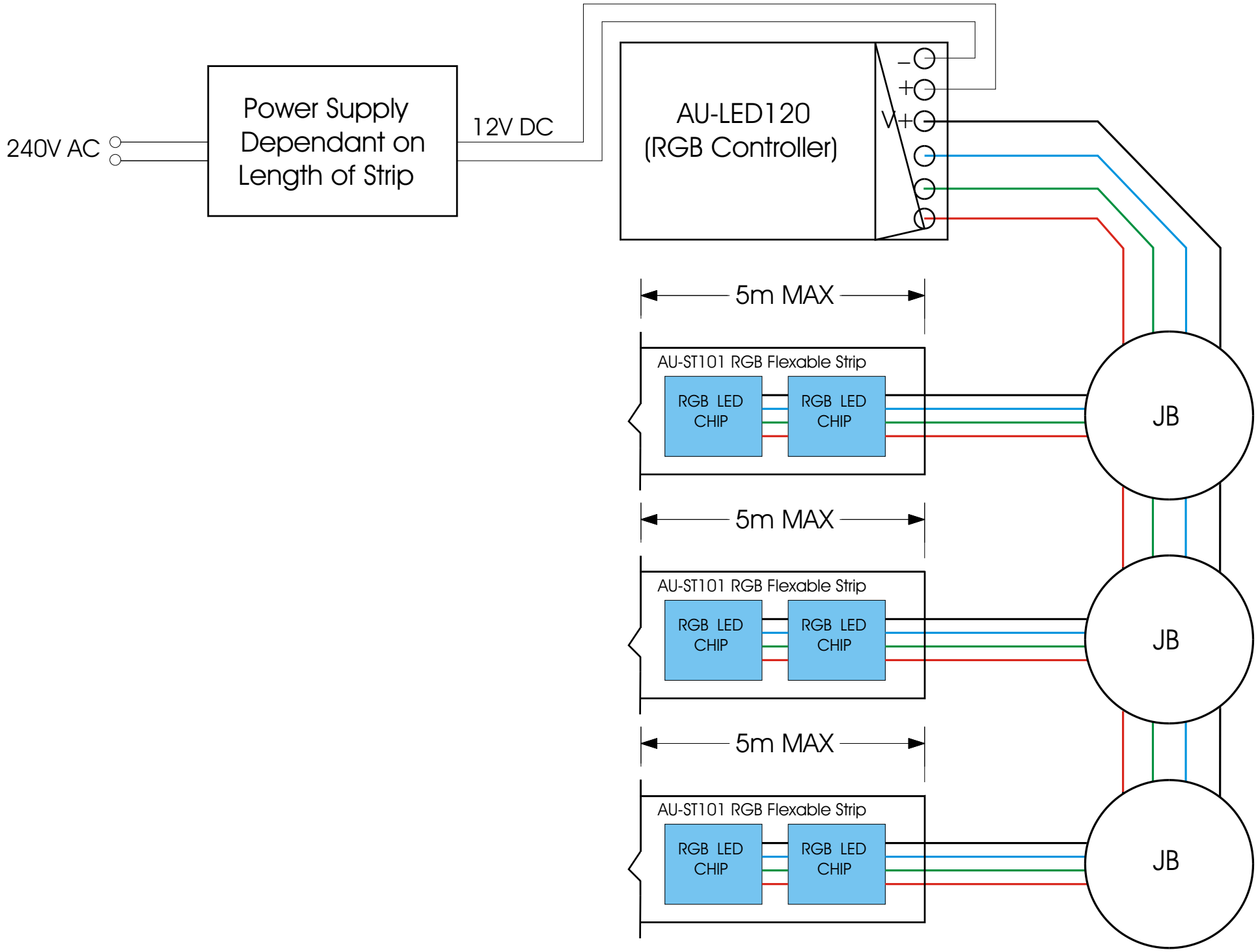
240V AC
Power Supply
Dependant on
Length of Strip
12V DC
AU-LED120
(RGB Controller)
–
+
V+
5m MAX
AU-ST101 RGB Flexable Strip
RGB LED
CHIP
RGB LED
CHIP
JB
5m MAX
AU-ST101 RGB Flexable Strip
RGB LED
CHIP
RGB LED
CHIP
JB
5m MAX
AU-ST101 RGB Flexable Strip
RGB LED
CHIP
RGB LED
CHIP
JB

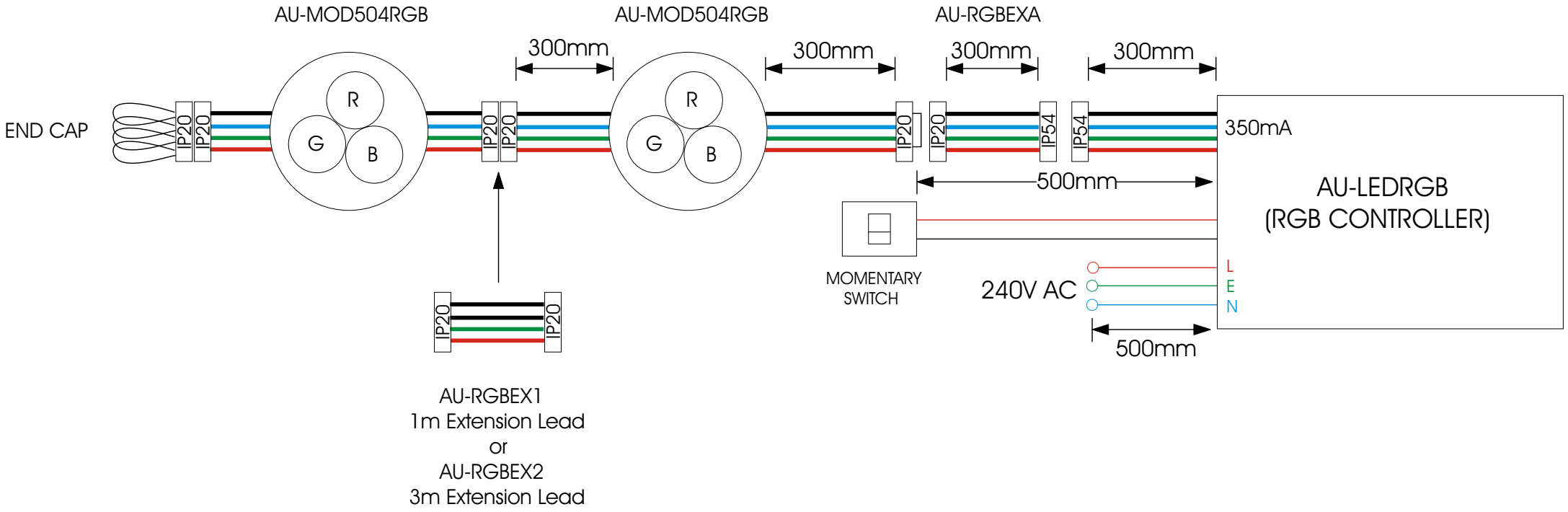
AU-MOD504RGB
AU-MOD504RGB
AU-RGBEXA
300mm
300mm
300mm
300mm
END CAP
IP20
IP20
R
G
B
IP20
IP20
R
G
B
IP20
IP20
IP54
IP54
350mA
500mm
AU-LEDRGB
(RGB CONTROLLER)
MOMENTARY
SWITCH
240V AC
L
E
N
500mm
IP20
IP20
AU-RGBEX1
1m Extension Lead
or
AU-RGBEX2
3m Extension Lead

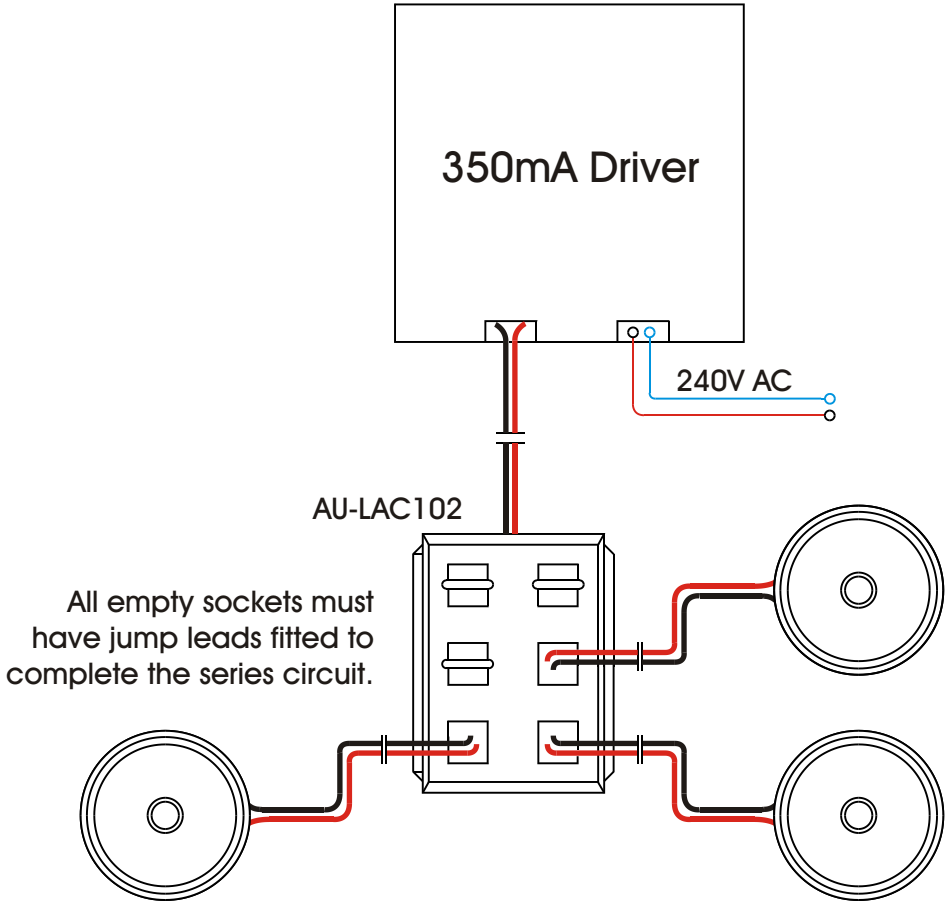
350mA Driver
240V AC
AU-LAC102
All empty sockets must have jump leads fitted to complete the series circuit.

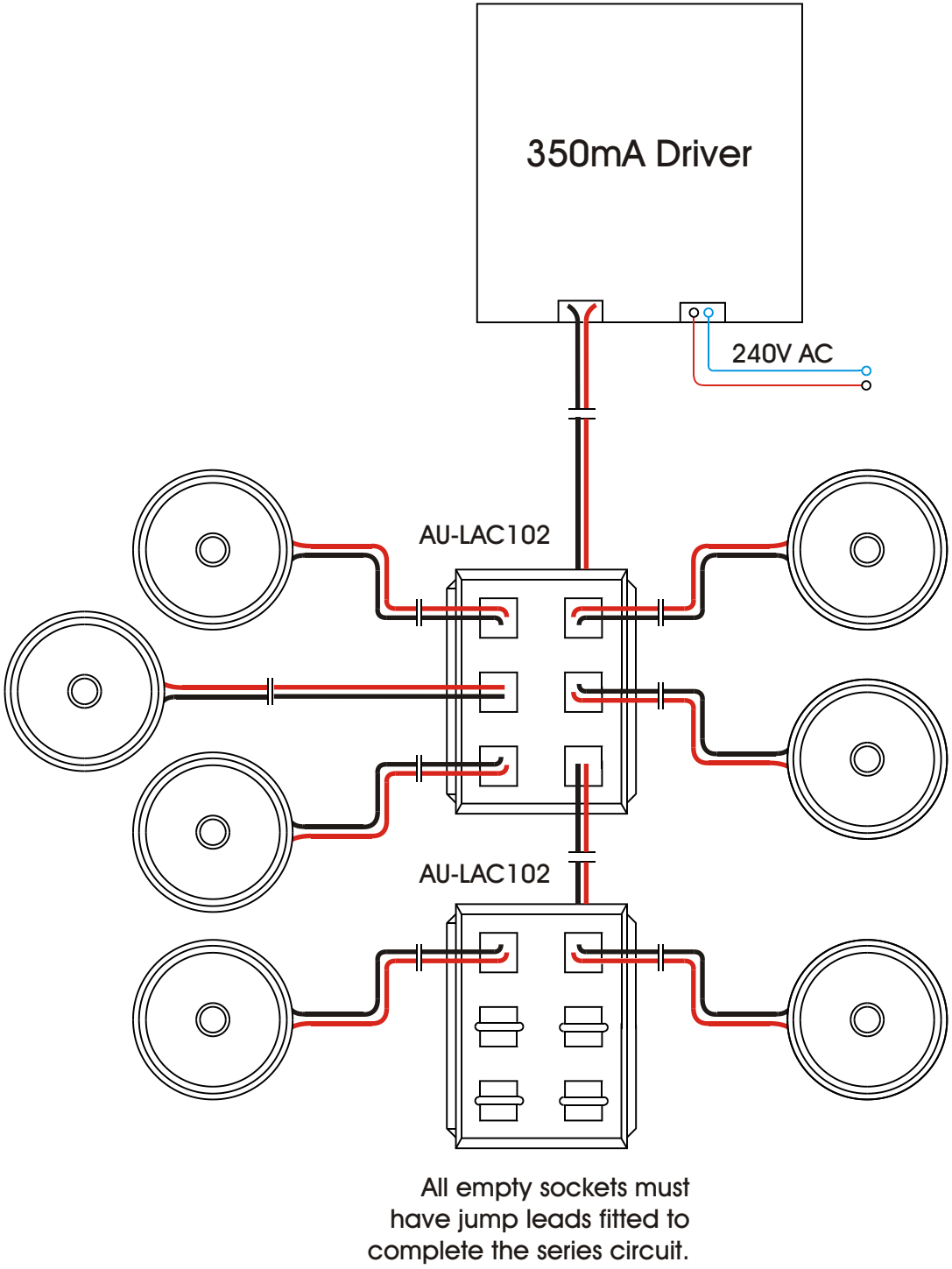
350mA Driver
240V AC
AU-LAC102
AU-LAC102
All empty sockets must have jump leads fitted to complete the series circuit.

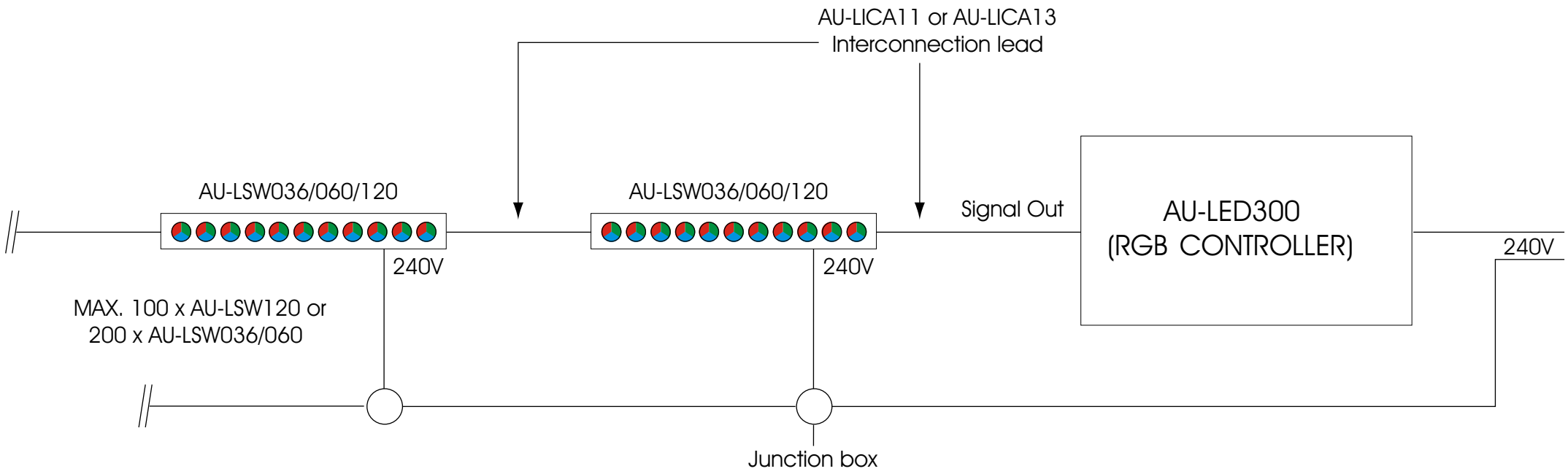
AU-LICA11 or AU-LICA13
Interconnection lead
AU-LSW036/060/120
AU-LSW036/060/120
Signal Out
AU-LED300
(RGB CONTROLLER)
240V
240V
240V
MAX. 100 x AU-LSW120 or
200 x AU-LSW036/060
Junction box